#8.410 EXPANDABLE RIM

02.20.2019

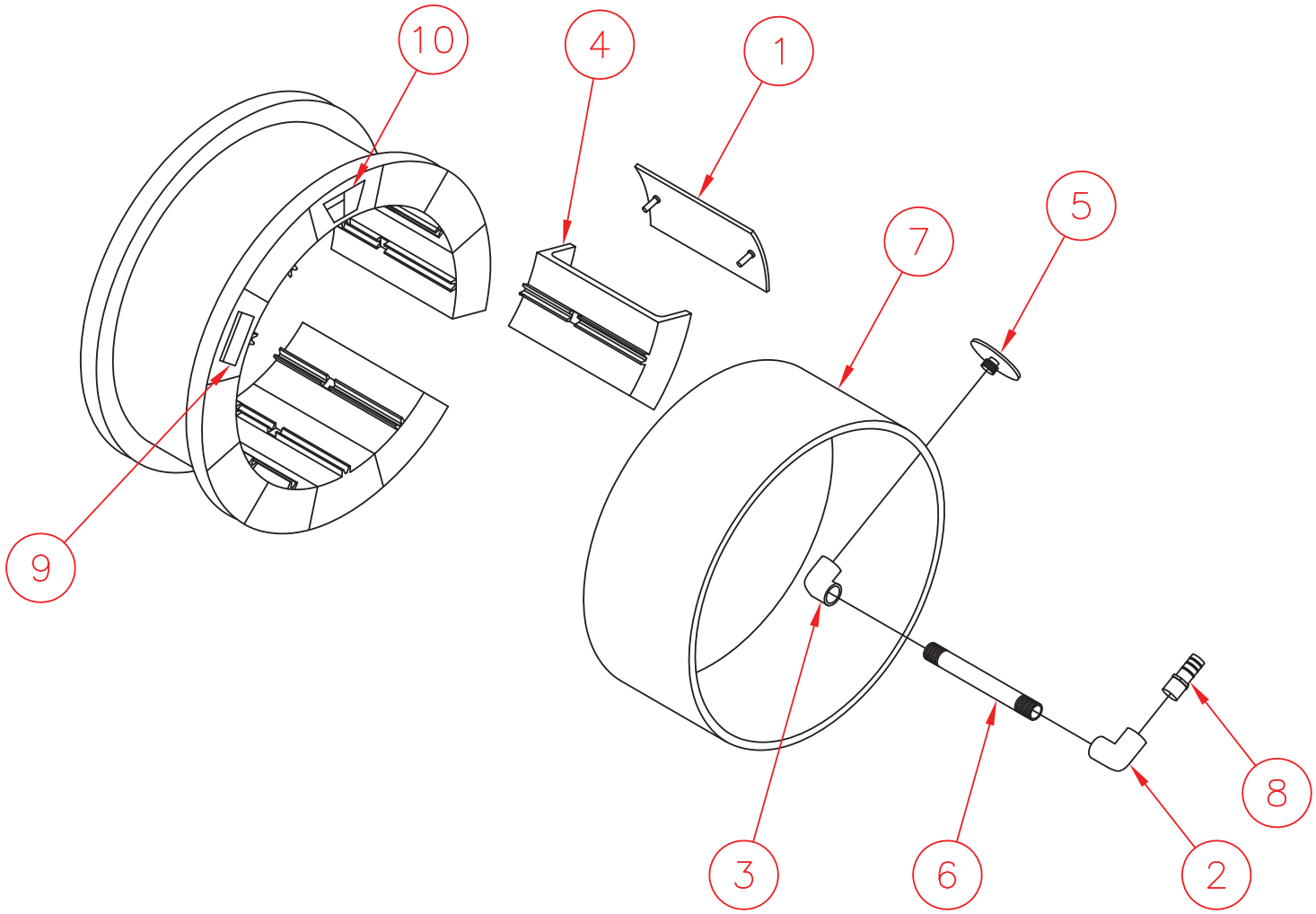

13” x 16” x 6.375”

REPAIR PARTS

No.	Description	Part No.	Qty.
1.	Slide Plate	5774	12
2.	Elbow Reducer 1/4 NPT x 1/8 NPT x 90	4919	2
3.	Elbow Reducer 1/4 NPT x 1/8 NPT x 90	4794-2	2
4.	Casting Section Alum-365	4871	12
5.	End Nozzle	4884	2
6.	Nipple	4918	2
7.	Belt, Rubber	4955	1
8.	Coupler, Male, 1/4 NPT Male	4980	2
9.	Name Plate	4998	1
10.	Decal-Warning (Pinch Point)	10185	2

Order parts from your distributor or jobber. When ordering parts always give the following information: Part number, description and serial number of your machine.

TSI TIRE SERVICE INTERNATIONAL

3451 S. 40th St., Phoenix, AZ 85040 • Toll Free 800.223.4540 • Arizona 602.437.5020 • Fax 602.437.5025